William Stallings
Computer Organization and Architecture
10th Edition

© 2016 Pearson Education, Inc., Hoboken, NJ. All rights reserved.

Chapter 21

Microprogrammed Control

© 2016 Pearson Education, Inc., Hoboken, NJ. All rights reserved.

Table 21.1
Machine Instruction Set for Wilkes Example

Order	Effect of Order
$A\ n$	$C(Acc) + C(n)$ to Acc_1
$S\ n$	$C(Acc) - C(n)$ to Acc_1
$H\ n$	$C(n)$ to Acc_2
$V\ n$	$C(Acc2) \times C(n)$ to Acc, where $C(n) \geq 0$
$T\ n$	$C(Acc_1)$ to n, 0 to Acc
$U\ n$	$C(Acc_1)$ to n
$R\ n$	$C(Acc) \times 2^{-(n+1)}$ to Acc
$L\ n$	$C(Acc) \times 2^{n+1}$ to Acc
$G\ n$	IF $C(Acc) < 0$, transfer control to n; if $C(Acc) \geq 0$, ignore (i.e., proceed serially)
$I\ n$	Read next character on input mechanism into n
$O\ n$	Send $C(n)$ to output mechanism

Notation:
Acc = accumulator
Acc_1 = most significant half of accumulator
Acc_2 = least significant half of accumulator
n = storage location n
$C(X)$ = contents of X (X = register or storage location)

© 2016 Pearson Education, Inc., Hoboken, NJ. All rights reserved.

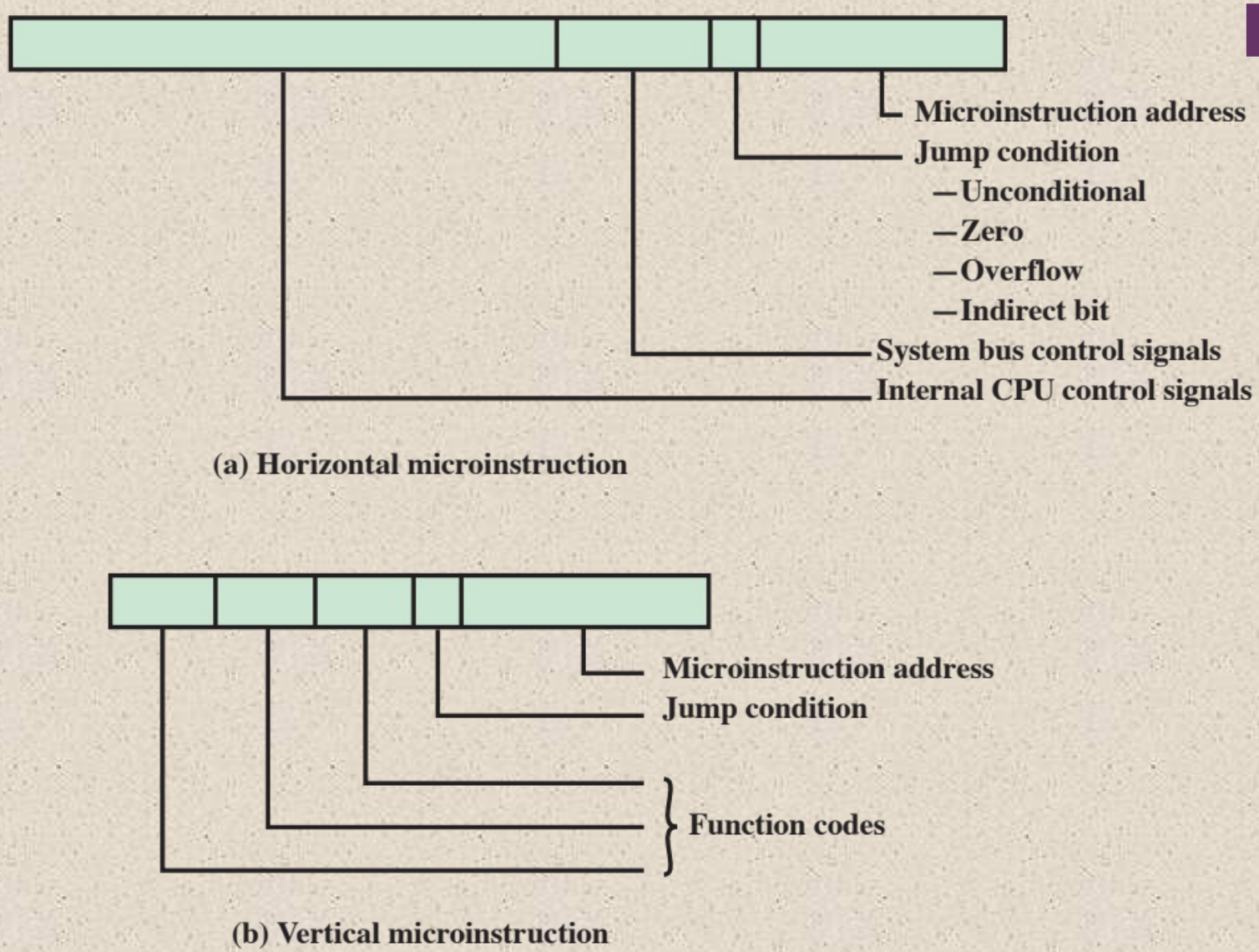

Figure 21.1 Typical Microinstruction Formats

© 2016 Pearson Education, Inc., Hoboken, NJ. All rights reserved.

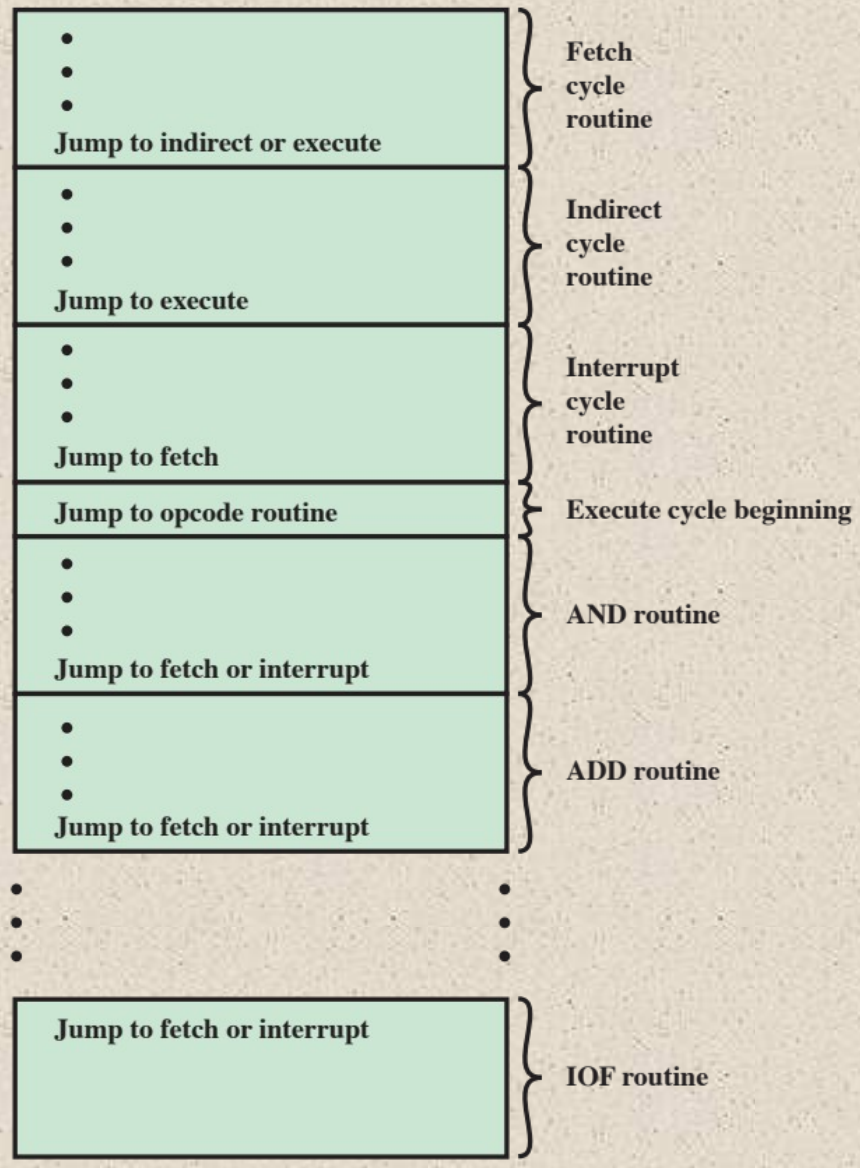

Figure 21.2 Organization of Control Memory

© 2016 Pearson Education, Inc., Hoboken, NJ. All rights reserved.

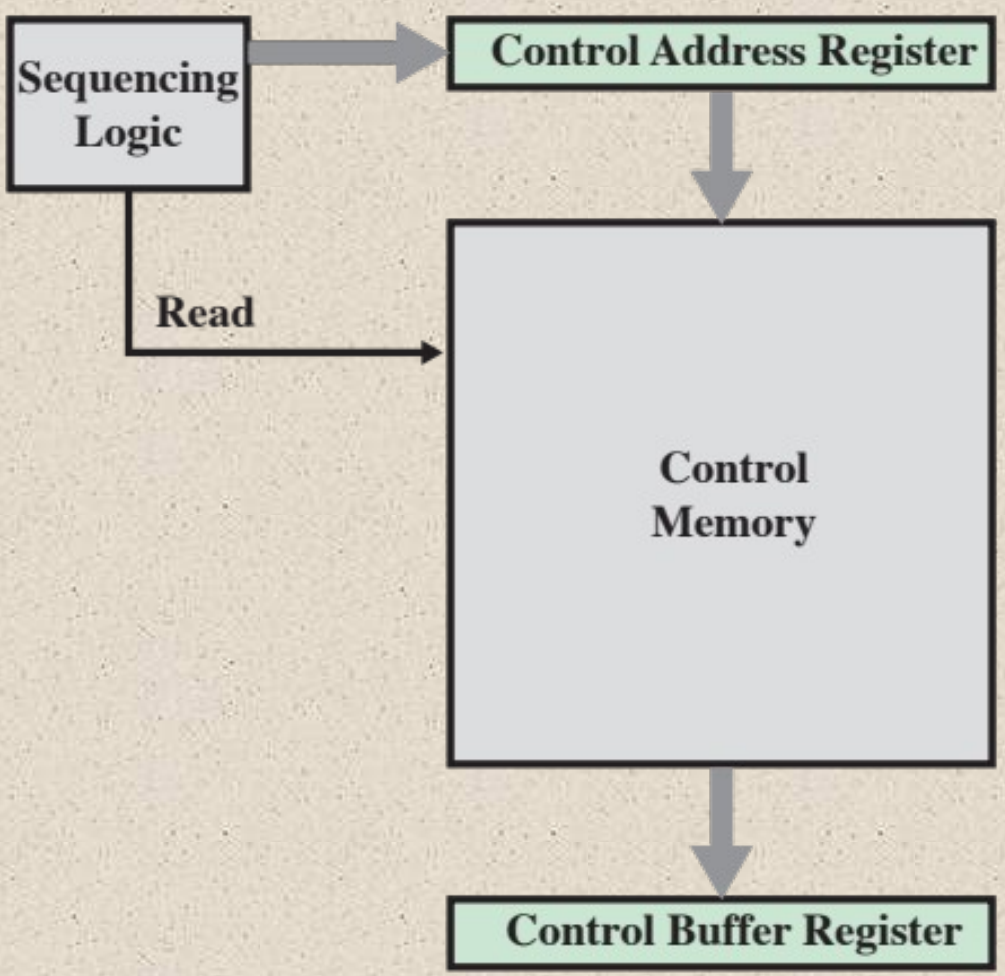

Figure 21.3 Control Unit Microarchitecture

© 2016 Pearson Education, Inc., Hoboken, NJ. All rights reserved.

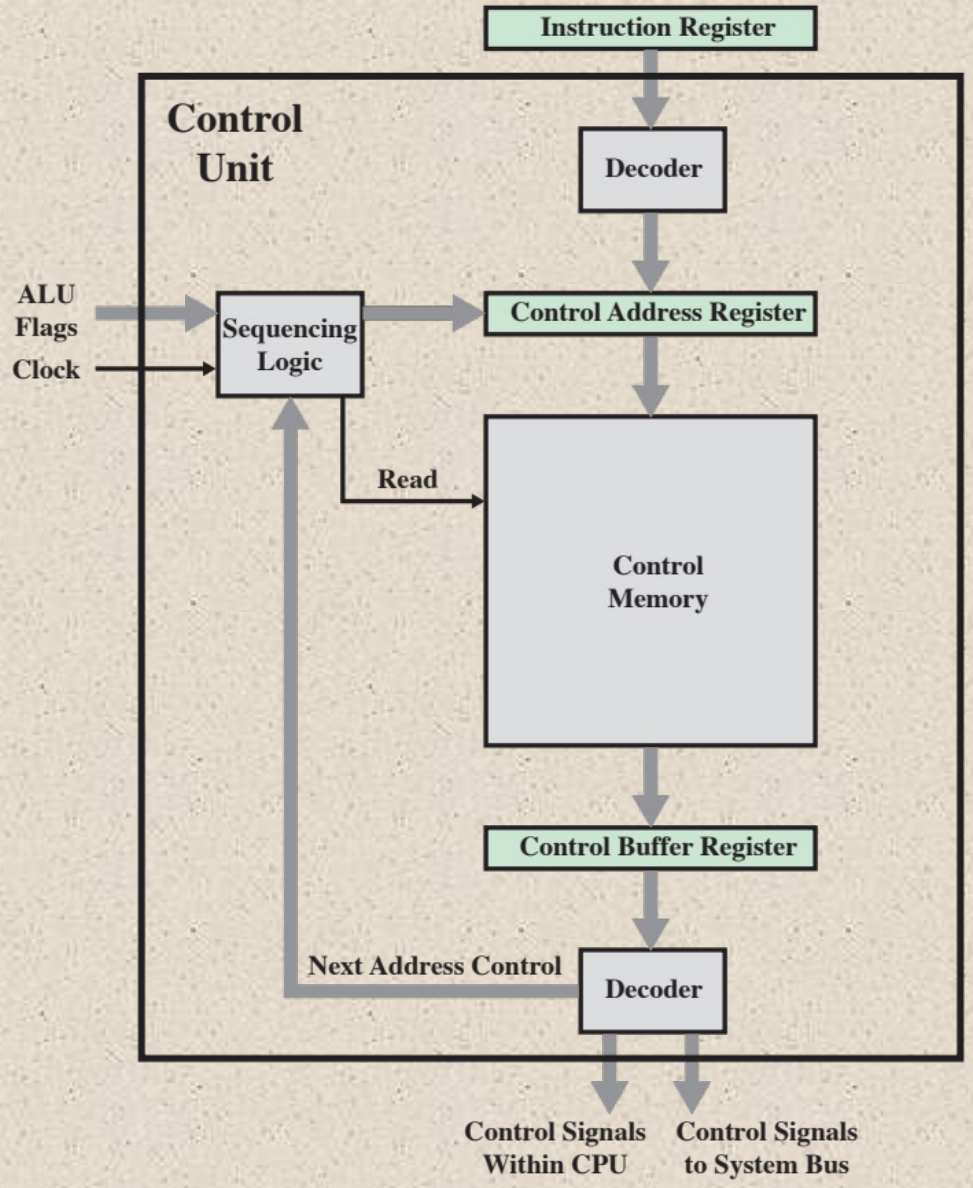

Figure 21.4 Functioning of Microprogrammed Control Unit

© 2016 Pearson Education, Inc., Hoboken, NJ. All rights reserved.

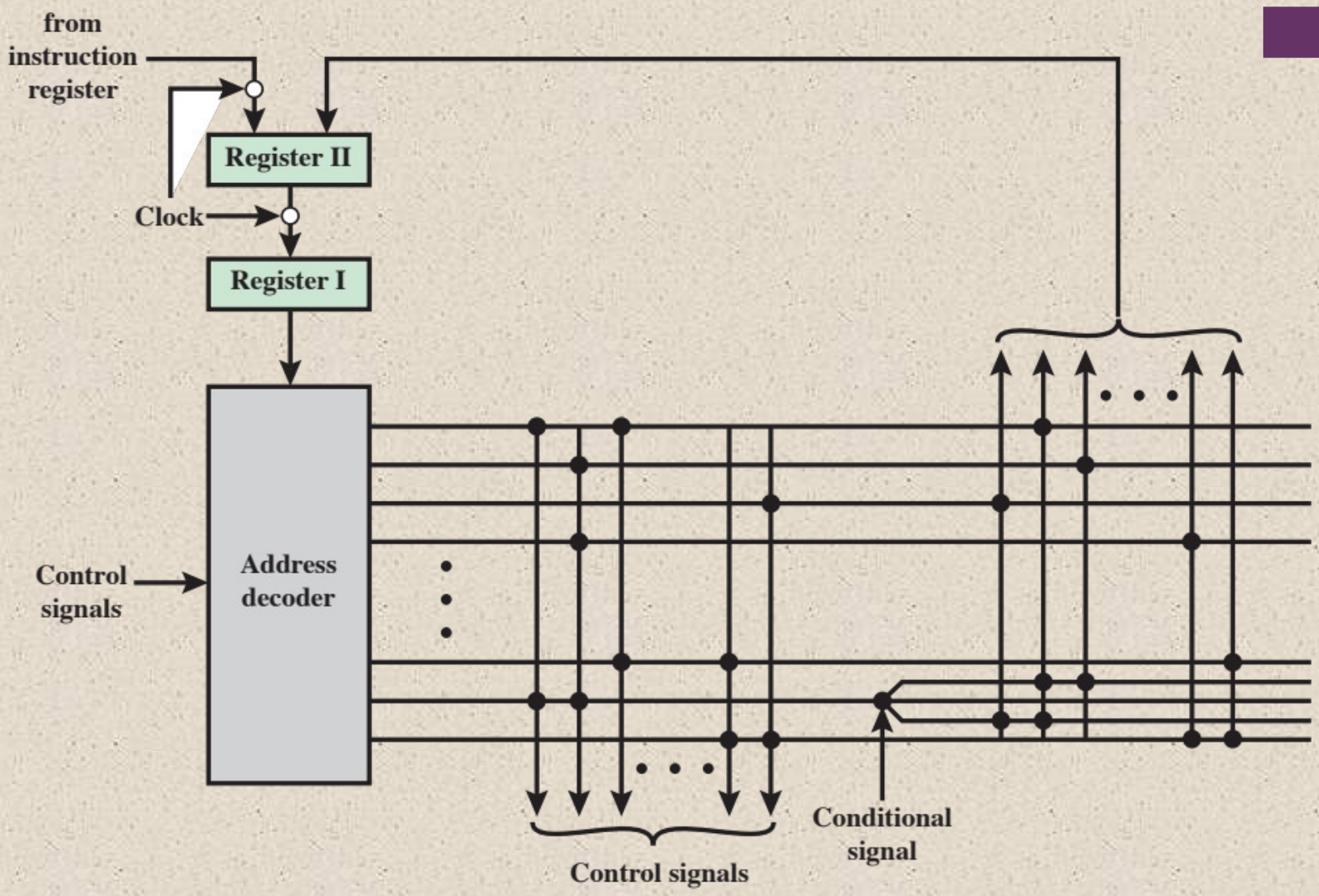

Figure 21.5 Wilkes's Microprogrammed Control Unit

© 2016 Pearson Education, Inc., Hoboken, NJ. All rights reserved.

Table 21.2 Microinstructions for Wilkes Example (page 1 of 2)

Notation: *A, B, C,* . . . stand for the various registers in the arithmetical and control register units. *C to D* indicates that the switching circuits connect the output of register *C* to the input register *D; (D + A)* to *C* indicates that the output register of *A* is connected to the one input of the adding unit (the output of *D* is permanently connected to the other input), and the output of the adder to register *C*. A numerical symbol *n* in quotes (e.g., '*n*') stands for the source whose output is the number *n* in units of the least significant digit.

		Arithmetical Unit	Control Register Unit	Conditional Flip-Flop		Next Micro-instruction	
				Set	Use	0	1
	0		*F* to *G* and *E*			1	
	1		(*G* to '1') to *F*			2	
	2		Store to *G*			3	
	3		*G* to *E*			4	
	4		*E* to decoder			—	
A	5	*C* to *D*				16	
S	6	*C* to *D*				17	
H	7	Store to *B*				0	
V	8	Store to *A*				27	
T	9	*C* to Store				25	
U	10	*C* to Store				0	
R	11	*B* to *D*	*E* to *G*			19	
L	12	*C* to *D*	*E* to *G*			22	
G	13		*E* to *G*	(1)C_5		18	
I	14	Input to Store				0	
O	15	Store to Output				0	
	16	(*D* + Store) to *C*				0	
	17	(*D* – Store) to *C*				0	
	18				1	0	1
	19	*D* to *B* (*R*)*	(*G* – '1') to *E*			20	
	20	*C* to *D*		(1)E_5		21	

© 2016 Pearson Education, Inc., Hoboken, NJ. All rights reserved.

(Table can be found on page 738 in the

Table 21.2 Microinstructions for Wilkes Example (page 2 of 2)

21	D to C (R)			1	11	0
22	D to C (L)†	(G – '1') to E			23	
23	B to D		(1)E_5		24	
24	D to B (L)			1	12	0
25	'0' to B				26	
26	B to C				0	
27	'0' to C	'18' to E			28	
28	B to D	E to G	(1)B_1		29	
29	D to B (R)	(G – '1') to E			30	
30	C to D (R)		(2)E_5	1	31	32
31	D to C			2	28	33
32	(D + A) to C			2	28	33
33	B to D		(1)B_1		34	
34	D to B (R)				35	
35	C to D (R)			1	36	37
36	D to C				0	
37	(D – A) to C				0	

*Right shift. The switching circuits in the arithmetic unit are arranged so that the least significant digit of the register C is placed in the most significant place of register B during right shift micro-operations, and the most significant digit of register C (sign digit) is repeated (thus making the correction for negative numbers).

†Left shift. The switching circuits are similarly arranged to pass the most significant digit of register B to the least significant place of register C during left shift micro-operations.

© 2016 Pearson Education, Inc., Hoboken, NJ. All rights reserved.

Microinstruction Sequencing

- The two basic tasks performed by a microprogrammed control unit are:
  - Microinstruction sequencing
    - Get the next microinstruction from the control memory
  - Microinstruction execution
    - Generate the control signals needed to execute the microinstruction
    - In designing a control unit, these tasks must be considered together because both affect the format of the microinstruction and the timing of the control unit

© 2016 Pearson Education, Inc., Hoboken, NJ. All rights reserved.

Design Considerations

Two concerns are involved in the design of a microinstruction sequencing technique:

The size of the microinstruction

- Minimizing the size of the control memory reduces the cost of that component

The address-generation time

- Execute microinstruction as fast as possible

In executing a microprogram the address of the next microinstruction to be executed is in one of these categories:

Determined by instruction register

- Occurs only once per instruction cycle, just after an instruction is fetched

Next sequential address

- Most common in most designs

Branch

- Are a necessary part of a microprogram

© 2016 Pearson Education, Inc., Hoboken, NJ. All rights reserved.

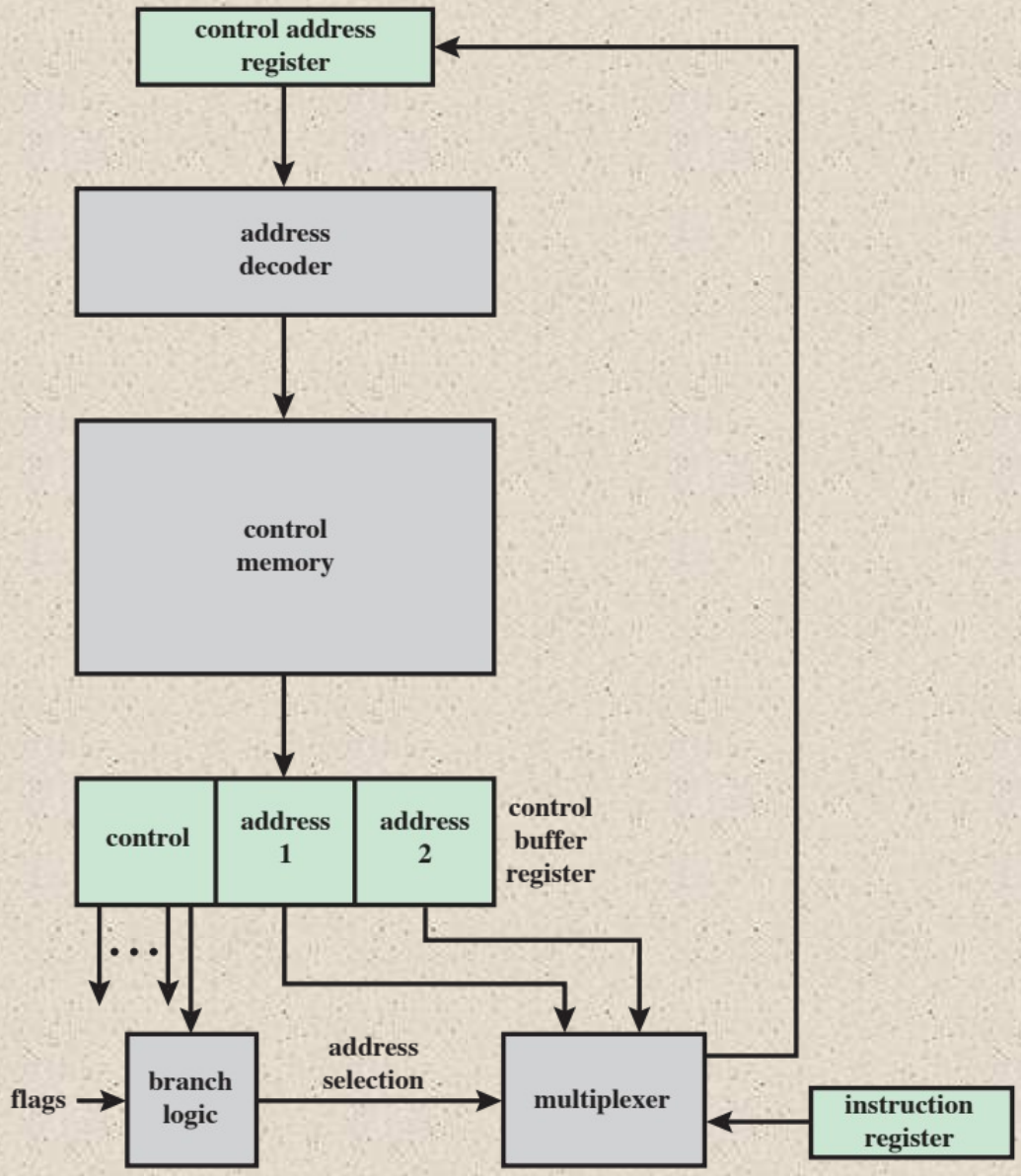

Figure 21.6 Branch Control Logic: Two Address Fields

© 2016 Pearson Education, Inc., Hoboken, NJ. All rights reserved.

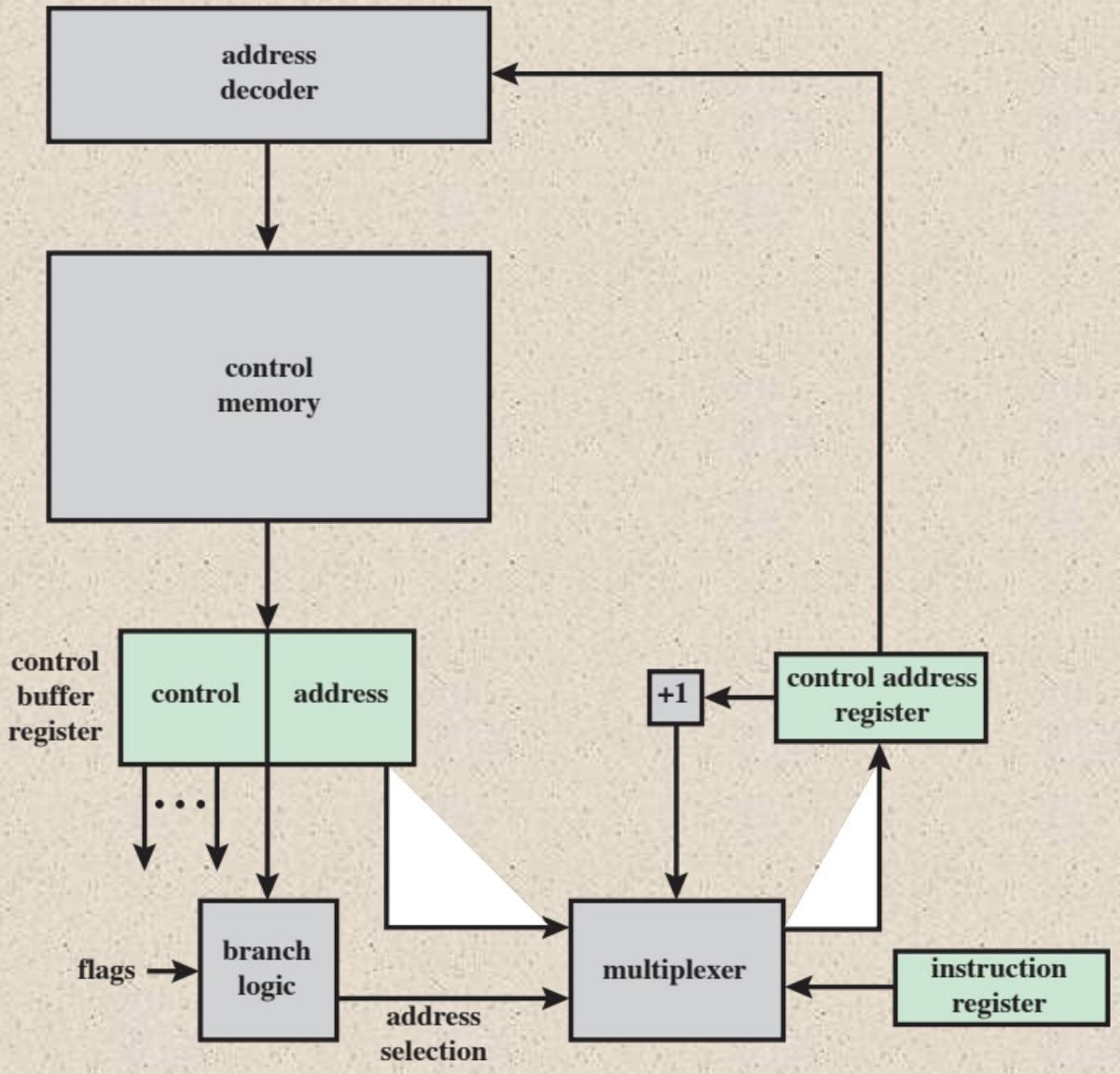

Figure 21.7 Branch Control Logic: Single Address Field

© 2016 Pearson Education, Inc., Hoboken, NJ. All rights reserved.

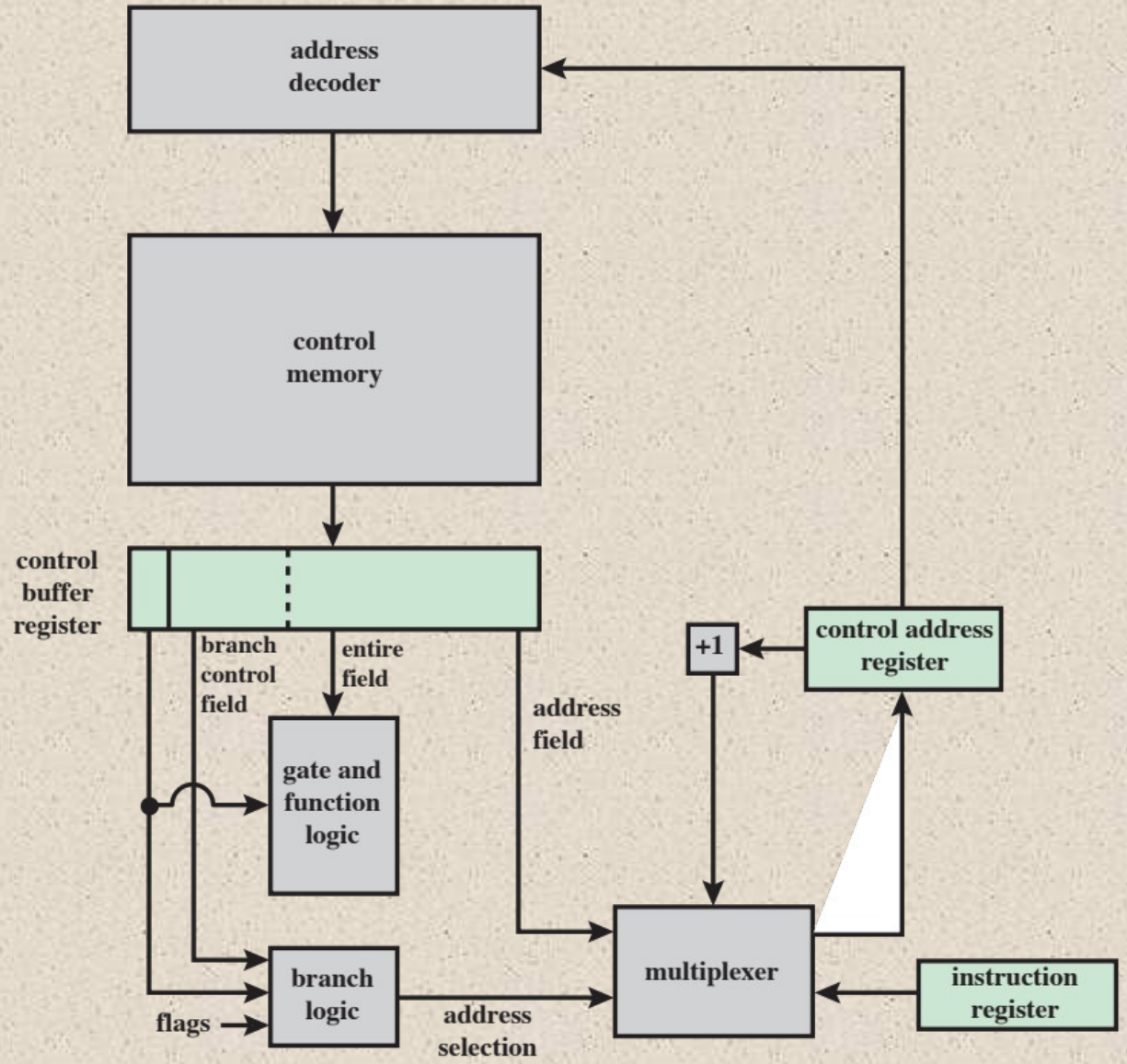

Figure 21.8 Branch Control Logic: Variable Format

© 2016 Pearson Education, Inc., Hoboken, NJ. All rights reserved.

Table 21.3
Microinstruction Address Generation Techniques

Explicit	Implicit
Two-field	Mapping
Unconditional branch	Addition
Conditional branch	Residual control

© 2016 Pearson Education, Inc., Hoboken, NJ. All rights reserved.

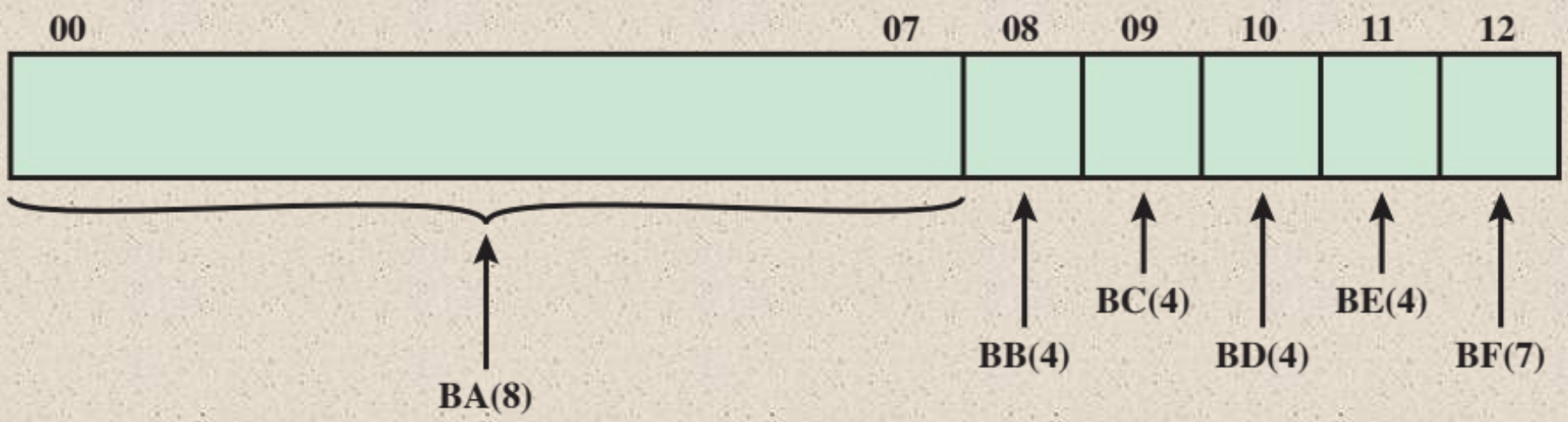

Figure 21.9 IBM 3033 Control Address Register

© 2016 Pearson Education, Inc., Hoboken, NJ. All rights reserved.

LSI-11 Microinstruction Sequencing

- LSI-11 is a microcomputer version of a PDP-11, with the main components of the system residing on a single board
- The LSI-11 is implemented using a microprogrammed control unit
- Makes use of a 22-bit microinstruction and a control memory of 2K 22-bit words
- The next microinstruction address is determined in one of five ways:
  - Next sequential address
  - Opcode mapping
  - Subroutine facility
  - Interrupt testing
  - Branch

© 2016 Pearson Education, Inc., Hoboken, NJ. All rights reserved.

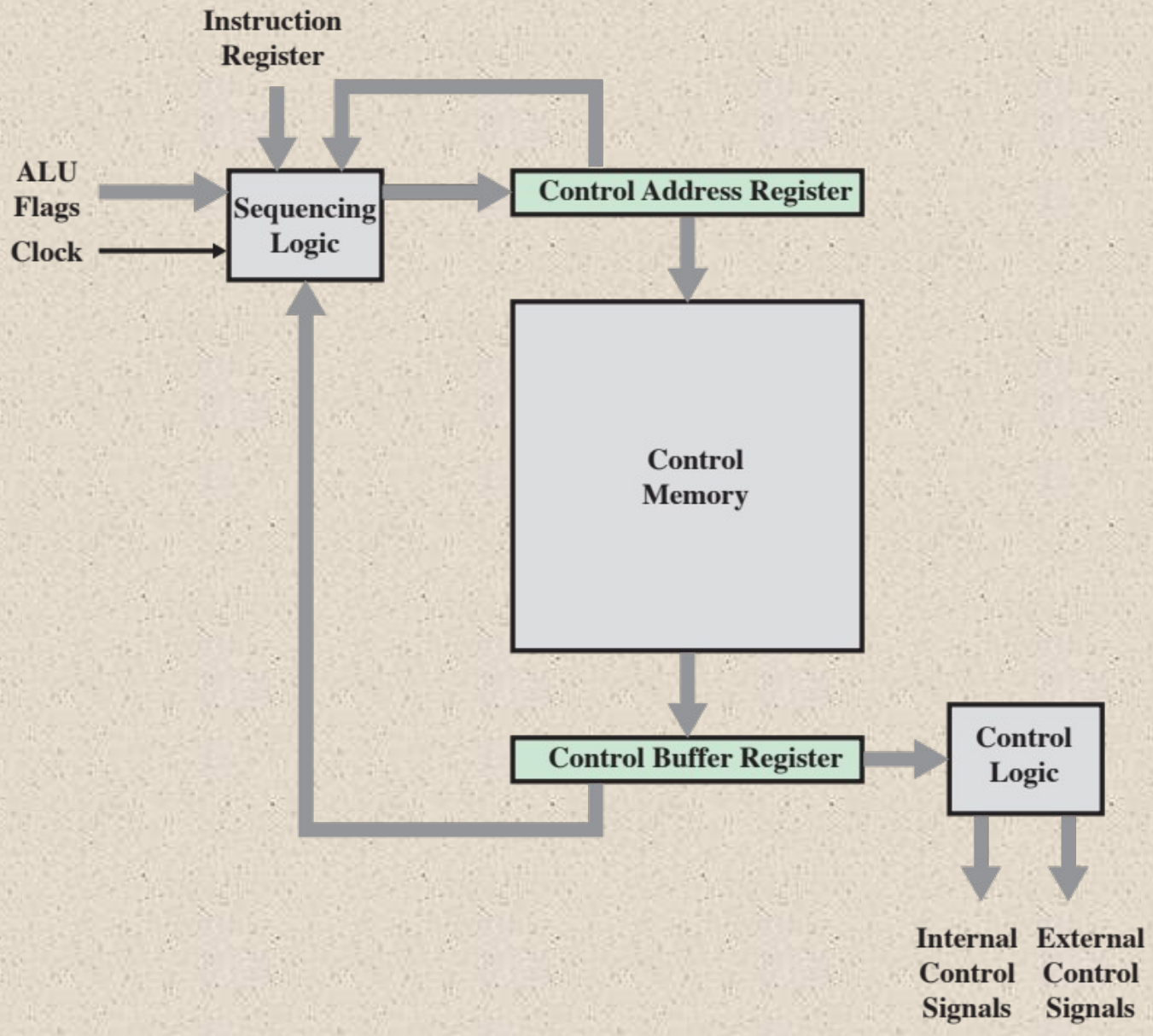

Figure 21.10 Control Unit Organization

© 2016 Pearson Education, Inc., Hoboken, NJ. All rights reserved.

Table 21.4
The Microinstruction Spectrum

Characteristics	
Unencoded	Highly encoded
Many bits	Few bits
Detailed view of hardware	Aggregated view of hardware
Difficult to program	Easy to program
Concurrency fully exploited	Concurrency not fully exploited
Little or no control logic	Complex control logic
Fast execution	Slow execution
Optimize performance	Optimize programming
Terminology	
Unpacked	Packed
Horizontal	Vertical
Hard	Soft

© 2016 Pearson Education, Inc., Hoboken, NJ. All rights reserved.

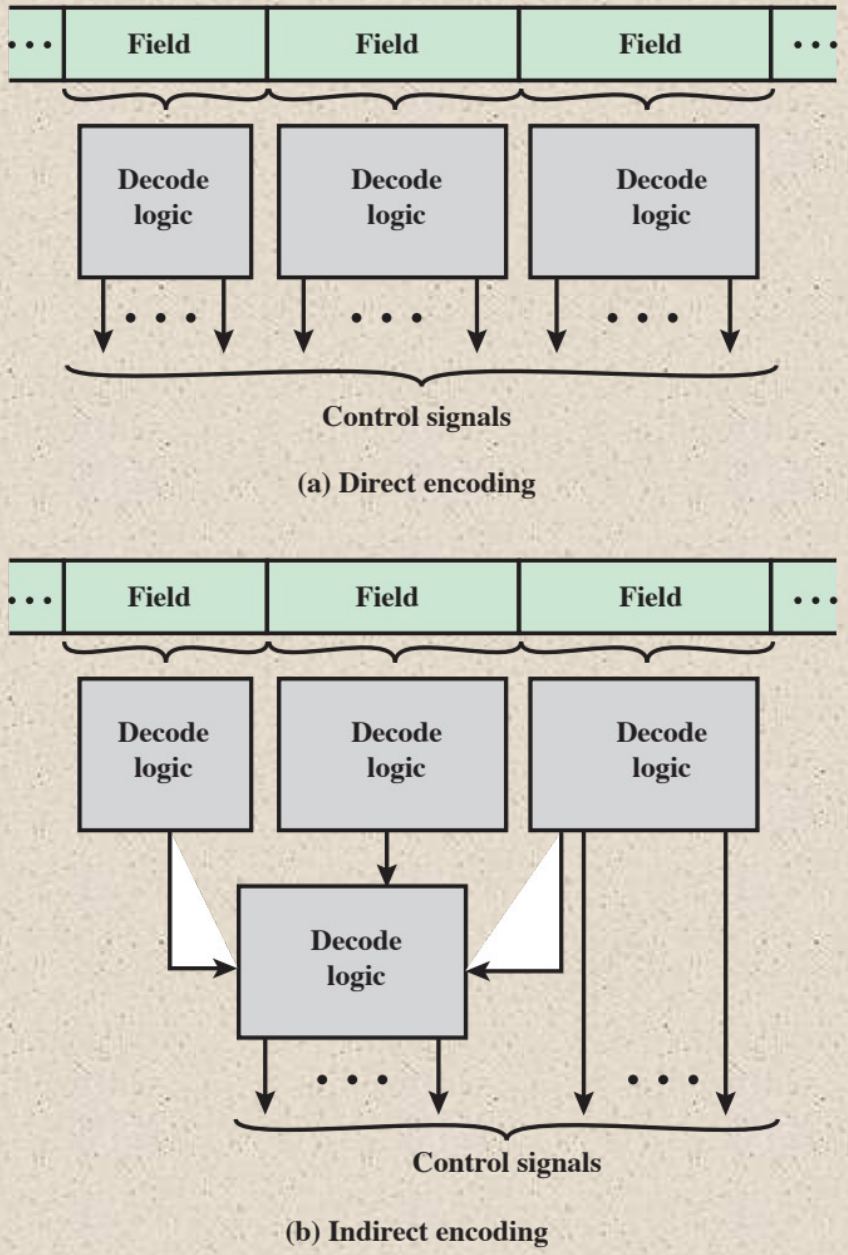

Figure 21.11 Microinstruction Encoding

© 2016 Pearson Education, Inc., Hoboken, NJ. All rights reserved.

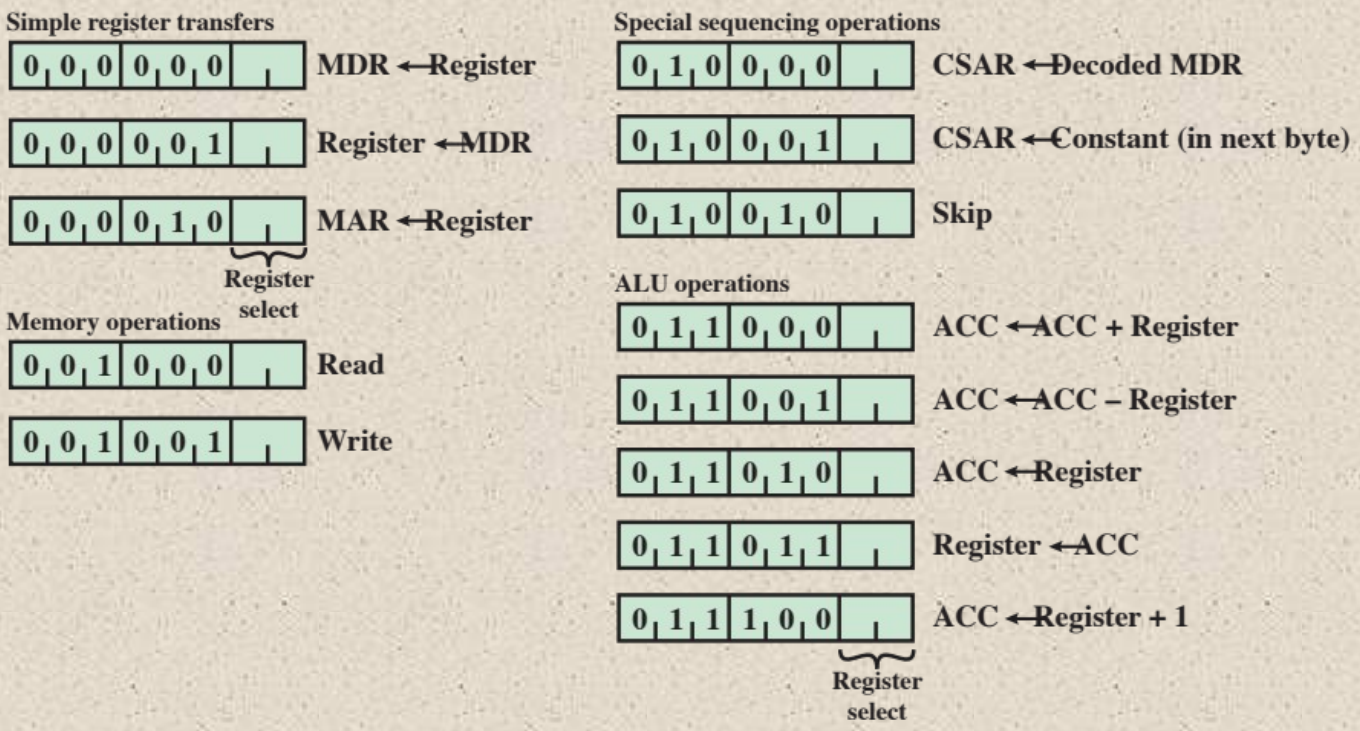

(a) Vertical microinstruction format

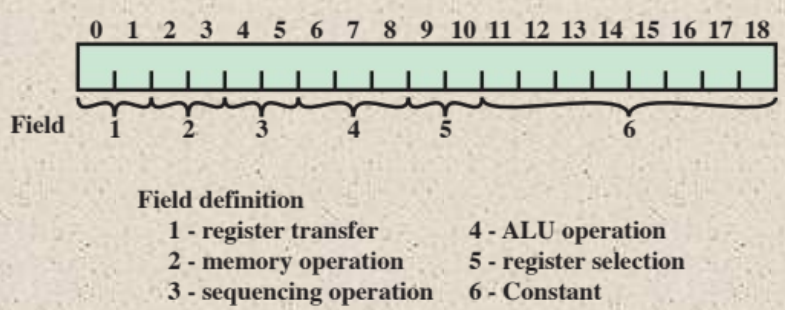

(b) Horizontal microinstruction format

Figure 21.12 Alternative Microinstruction Formats for a Simple Machine

© 2016 Pearson Education, Inc., Hoboken, NJ. All rights reserved.

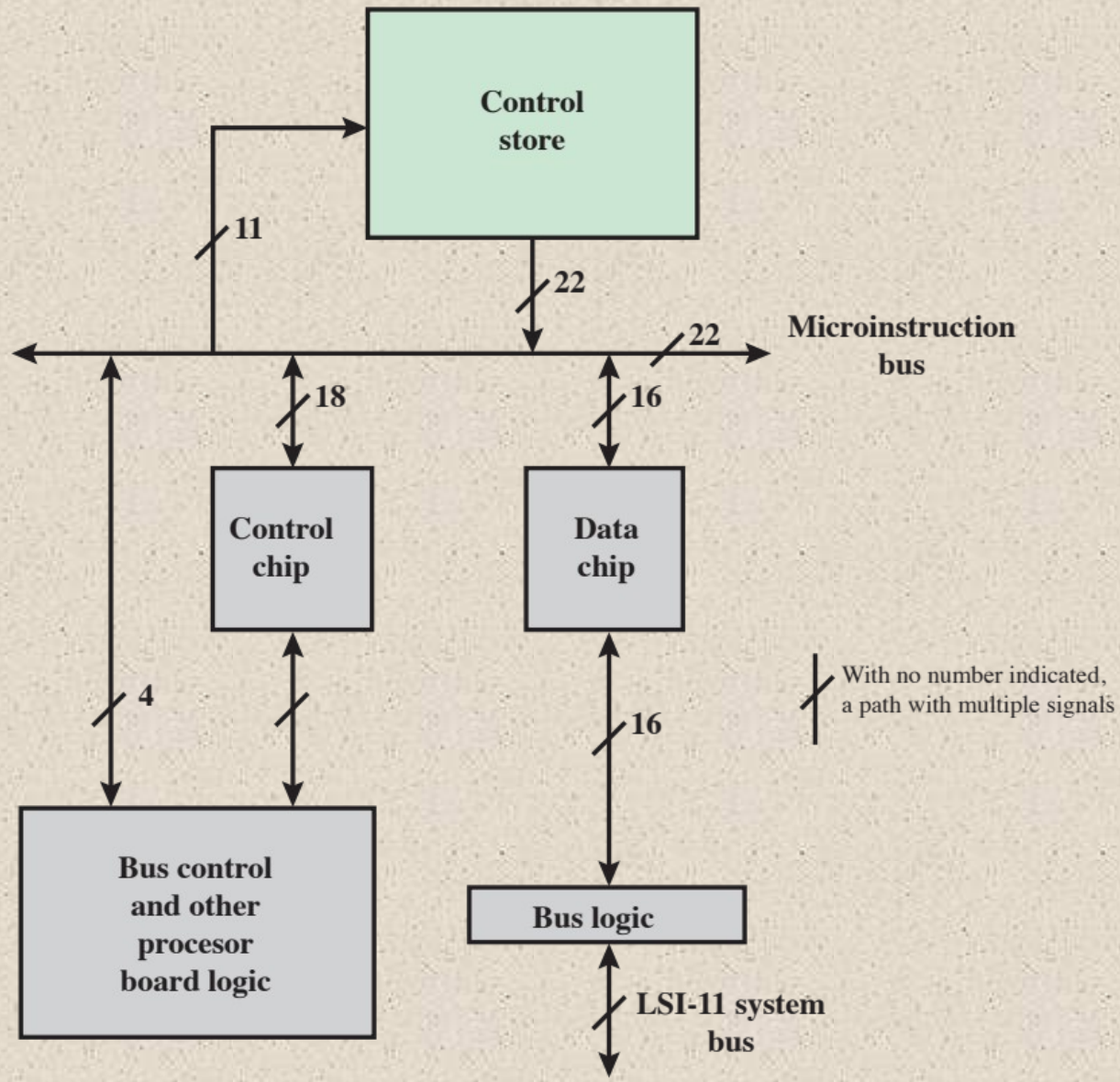

Figure 21.13 Simplified Block Diagram of the LSI-11 Processor

© 2016 Pearson Education, Inc., Hoboken, NJ. All rights reserved.

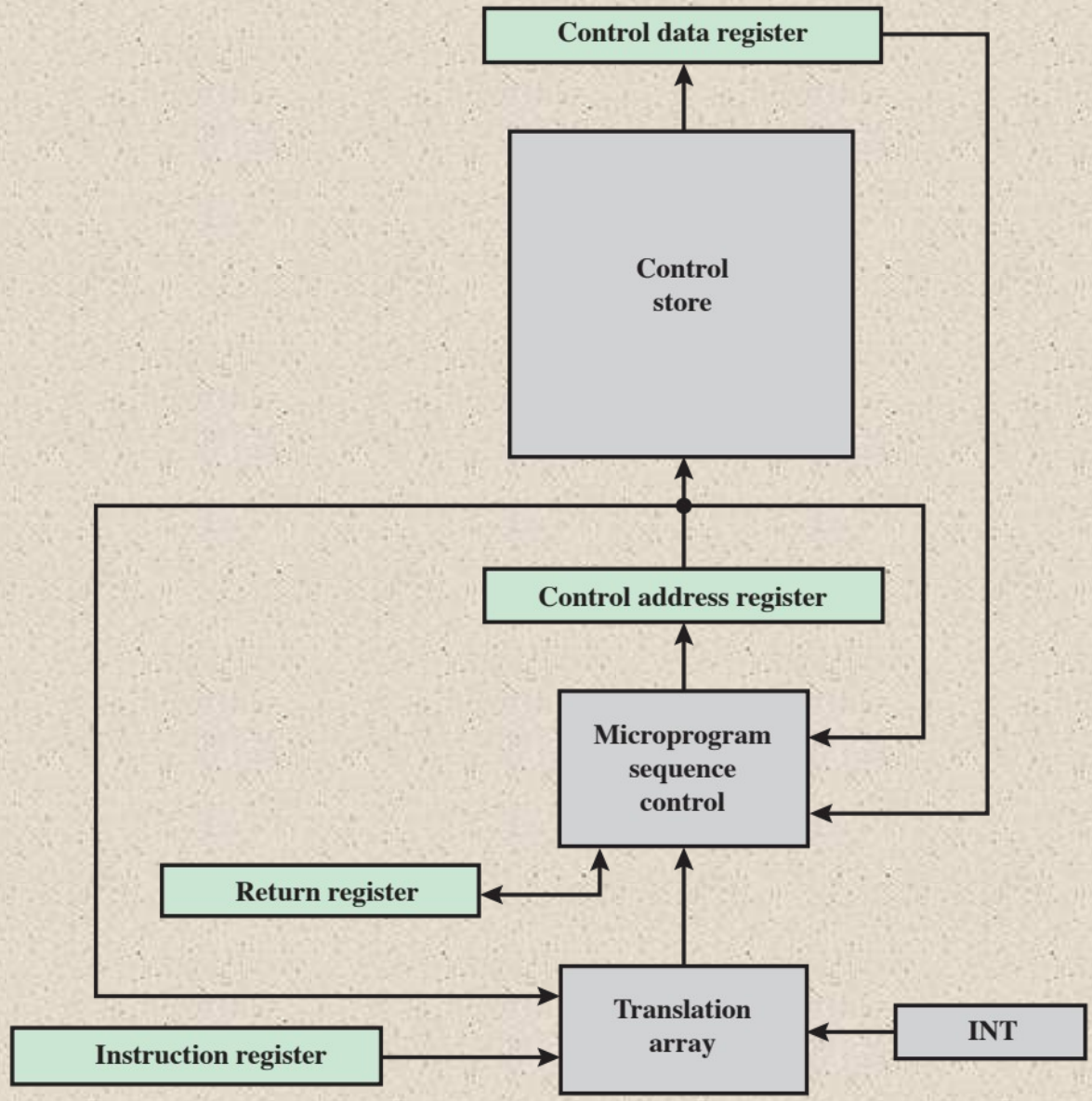

Figure 21.14 Organization of the LSI-11 Control Unit

© 2016 Pearson Education, Inc., Hoboken, NJ. All rights reserved.

Table 21.5
Some LSI-11 Microinstructions

Arithmetic Operations	General Operations
Add word (byte, literal)	MOV word (byte)
Test word (byte, literal)	Jump
Increment word (byte) by 1	Return
Increment word (byte) by 2	Conditional jump
Negate word (byte)	Set (reset) flags
Conditionally increment (decrement) byte	Load G low
Conditionally add word (byte)	Conditionally MOV word (byte)
Add word (byte) with carry	
Conditionally add digits	**Input/Output Operations**
Subtract word (byte)	Input word (byte)
Compare word (byte, literal)	Input status word (byte)
Subtract word (byte) with carry	Read
Decrement word (byte) by 1	Write
	Read (write) and increment word (byte) by 1
Logical Operations	Read (write) and increment word (byte) by 2
AND word (byte, literal)	Read (write) acknowledge
Test word (byte)	Output word (byte, status)
OR word (byte)	
Exclusive-OR word (byte)	
Bit clear word (byte)	
Shift word (byte) right (left) with (without) carry	
Complement word (byte)	

© 2016 Pearson Education, Inc., Hoboken, NJ. All rights reserved.

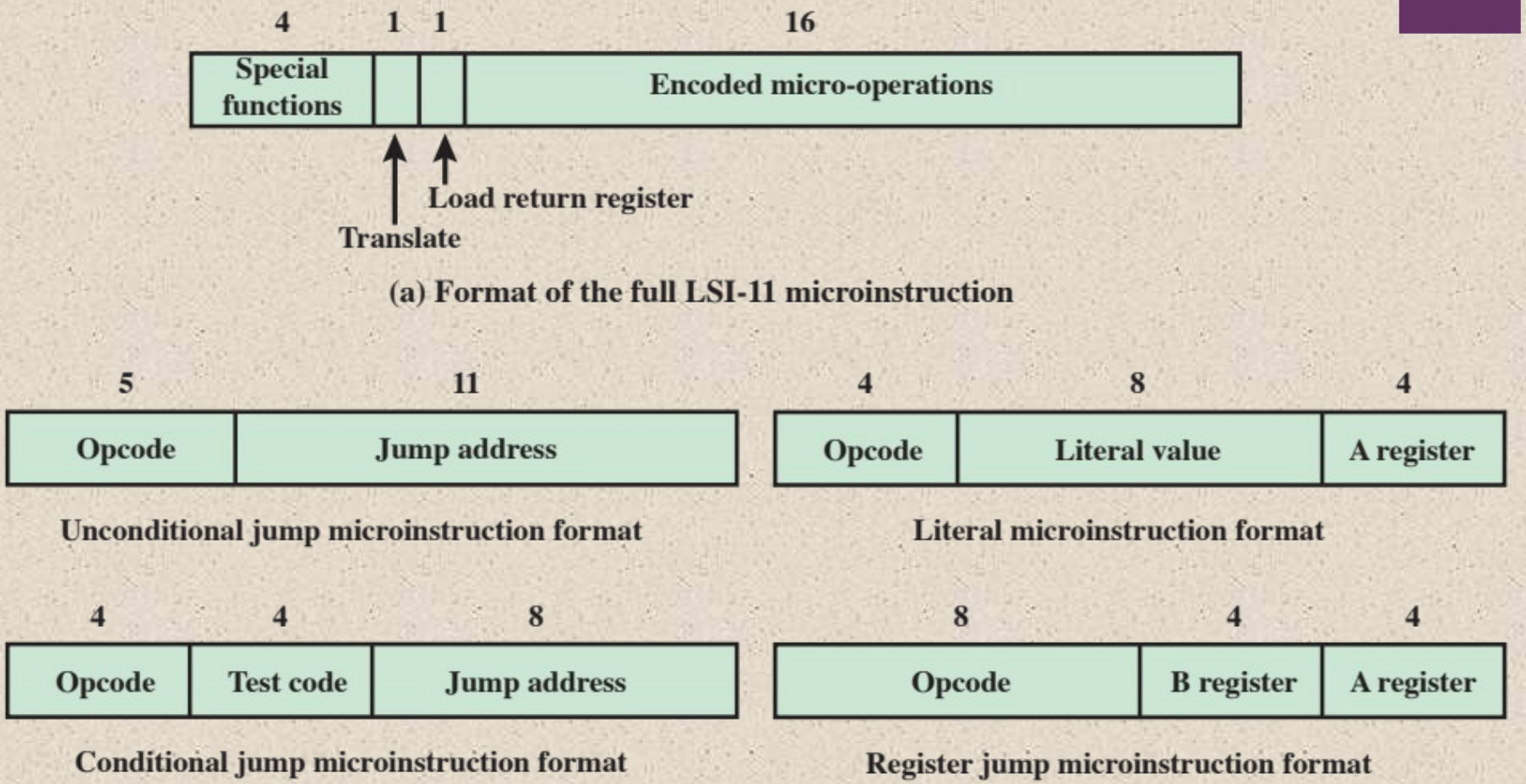

Figure 21.15 LSI-11 Microinstruction Format

© 2016 Pearson Education, Inc., Hoboken, NJ. All rights reserved.

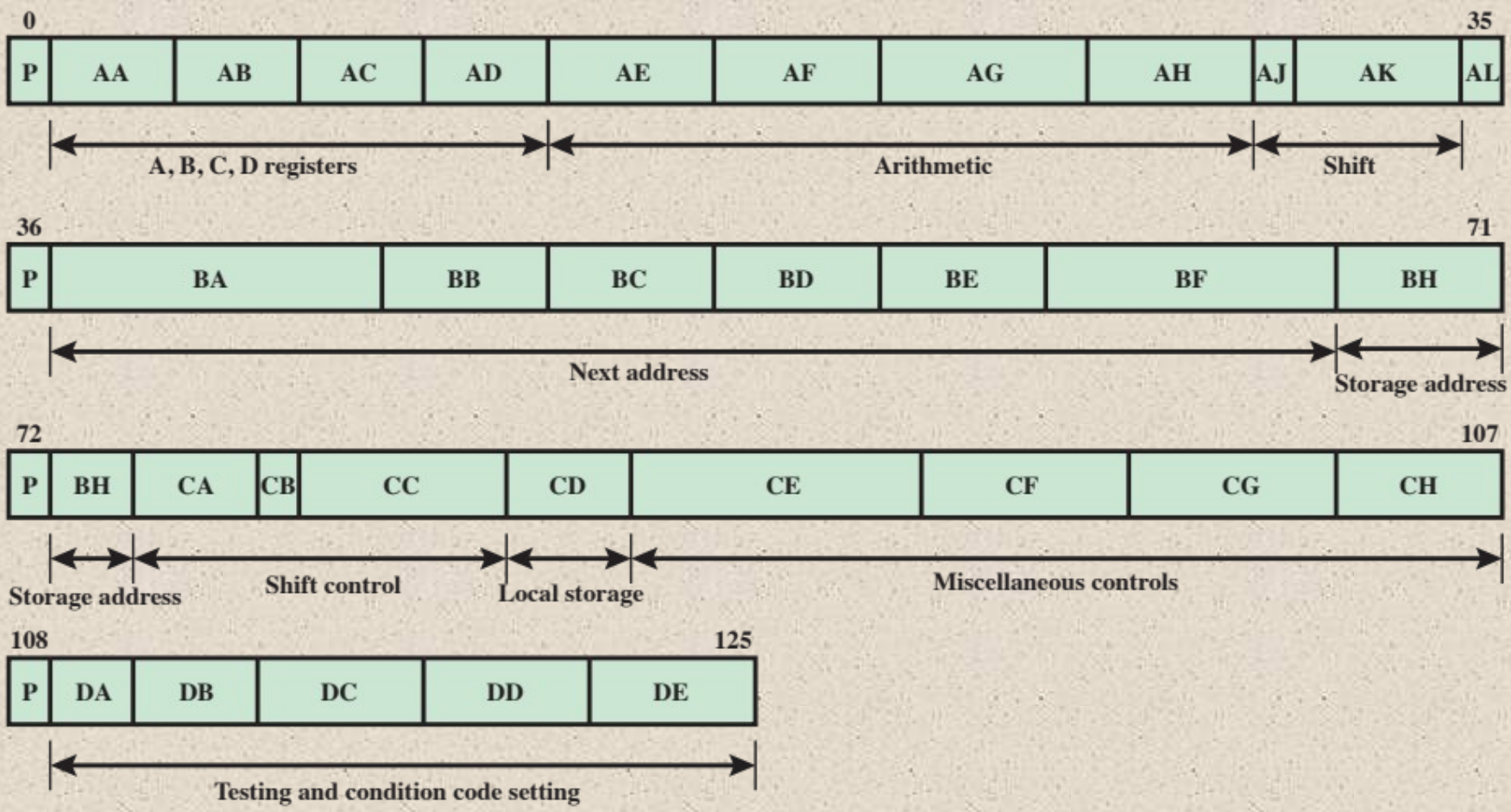

Figure 21.16 IBM 3033 Microinstruction Format

Table 21.6

IBM 3033 Microinstruction Control Fields

ALU Control Fields	
AA(3)	Load A register from one of data registers
AB(3)	Load B register from one of data registers
AC(3)	Load C register from one of data registers
AD(3)	Load D register from one of data registers
AE(4)	Route specified A bits to ALU
AF(4)	Route specified B bits to ALU
AG(5)	Specifies ALU arithmetic operation on A input
AH(4)	Specifies ALU arithmetic operation on B input
AJ(1)	Specifies D or B input to ALU on B side
AK(4)	Route arithmetic output to shifter
CA(3)	Load F register
CB(1)	Activate shifter
CC(5)	Specifies logical and carry functions
CE(7)	Specifies shift amount
Sequencing and Branching Fields	
AL(1)	End operation and perform branch
BA(8)	Set high-order bits (00–07) of control address register
BB(4)	Specifies condition for setting bit 8 of control address register
BC(4)	Specifies condition for setting bit 9 of control address register
BD(4)	Specifies condition for setting bit 10 of control address register
BE(4)	Specifies condition for setting bit 11 of control address register
BF(7)	Specifies condition for setting bit 12 of control address register

© 2016 Pearson Education, Inc., Hoboken, NJ. All rights reserved.

(Table can be found on page 755 in the

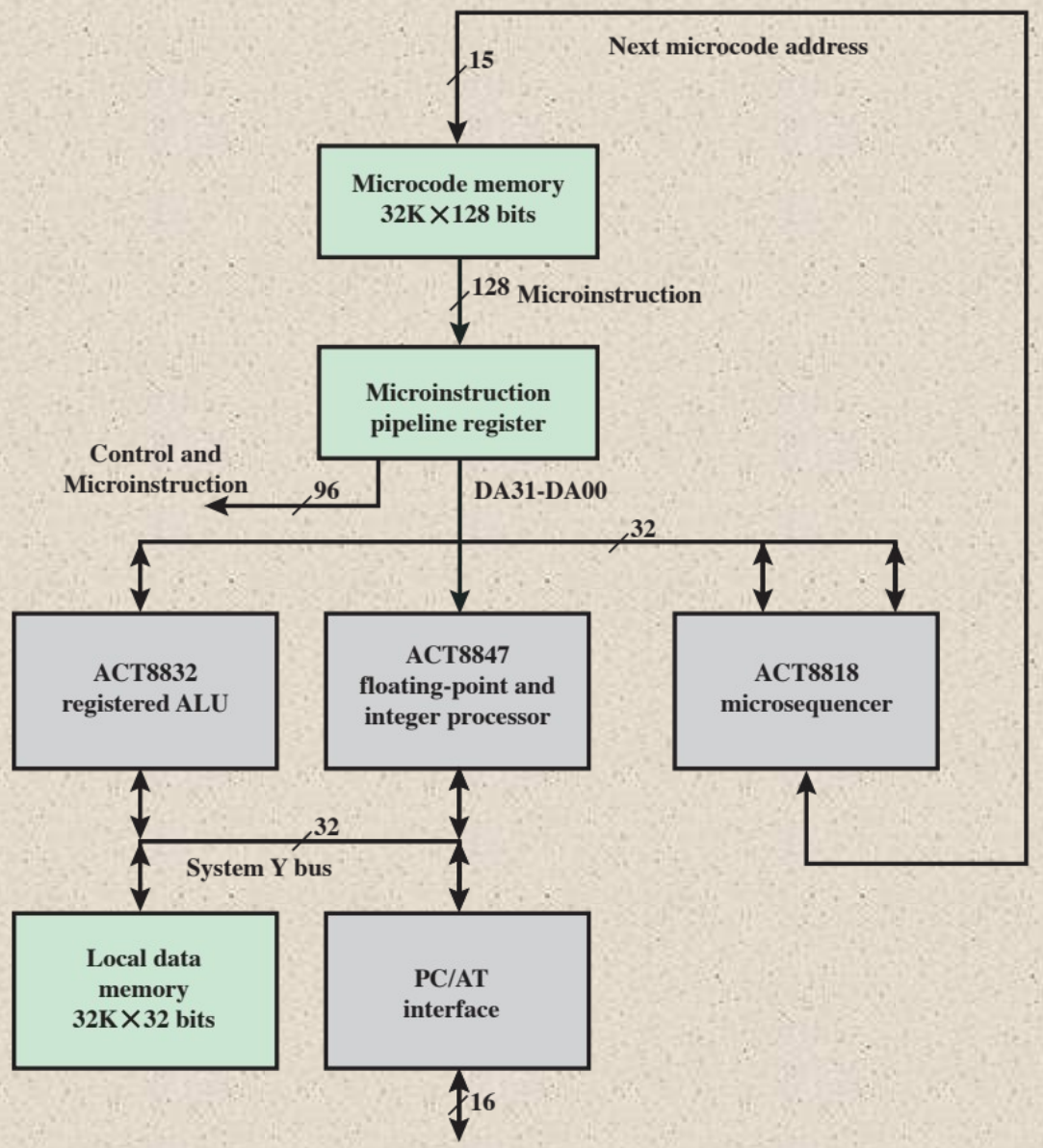

Figure 21.17 TI 8800 Block Diagram

© 2016 Pearson Education, Inc., Hoboken, NJ. All rights reserved.

Table 21.7 TI 8800 Microinstruction Format

Field Number	Number of Bits	Description
		Control of Board
1	5	Select condition code input
2	1	Enable/disable external I/O request signal
3	2	Enable/disable local data memory read/write operations
4	1	Load status/do no load status
5	2	Determine unit driving Y bus
6	2	Determine unit driving DA bus
		8847 Floating Point and Integer Processing Chip
7	1	C register control: clock, do not clock
8	1	Select most significant or least significant bits for Y bus
9	1	C register data source: ALU, multiplexer
10	4	Select IEEE or FAST mode for ALU and MUL
11	8	Select sources for data operands: RA registers, RB registers, P register, 5 register, C register
12	1	RB register control: clock, do not clock
13	1	RA register control: clock, do not clock
14	2	Data source confirmation
15	2	Enable/disable pipeline registers
16	11	8847 ALU function
		8832 Registered ALU
17	2	Write enable/disable data output to selected register: most significant half, least significant half
18	2	Select register file data source: DA bus, DB bus, ALU Y MUX output, system Y bus
19	3	Shift instruction modifier
20	1	Carry in: force, do not force
21	2	Set ALU configuration mode: 32, 16, or 8 bits
22	2	Select input to 5 multiplexer: register file, DB bus, MQ register
23	1	Select input to R multiplexer: register file, DA bus
24	6	Select register in file C for write
25	6	Select register in file B for read
26	6	Select register in file A for write
27	8	ALU function
		8818 Microsequencer
28	12	Control input signals to the 8818
		WCS Data Field
29	16	Most significant bits of writable control store data field
30	16	Least significant bits of writable control store data field

© 2016 Pearson Education, Inc., Hoboken, NJ. All rights reserved.

(Table can be found on page 758 in the textbook.)

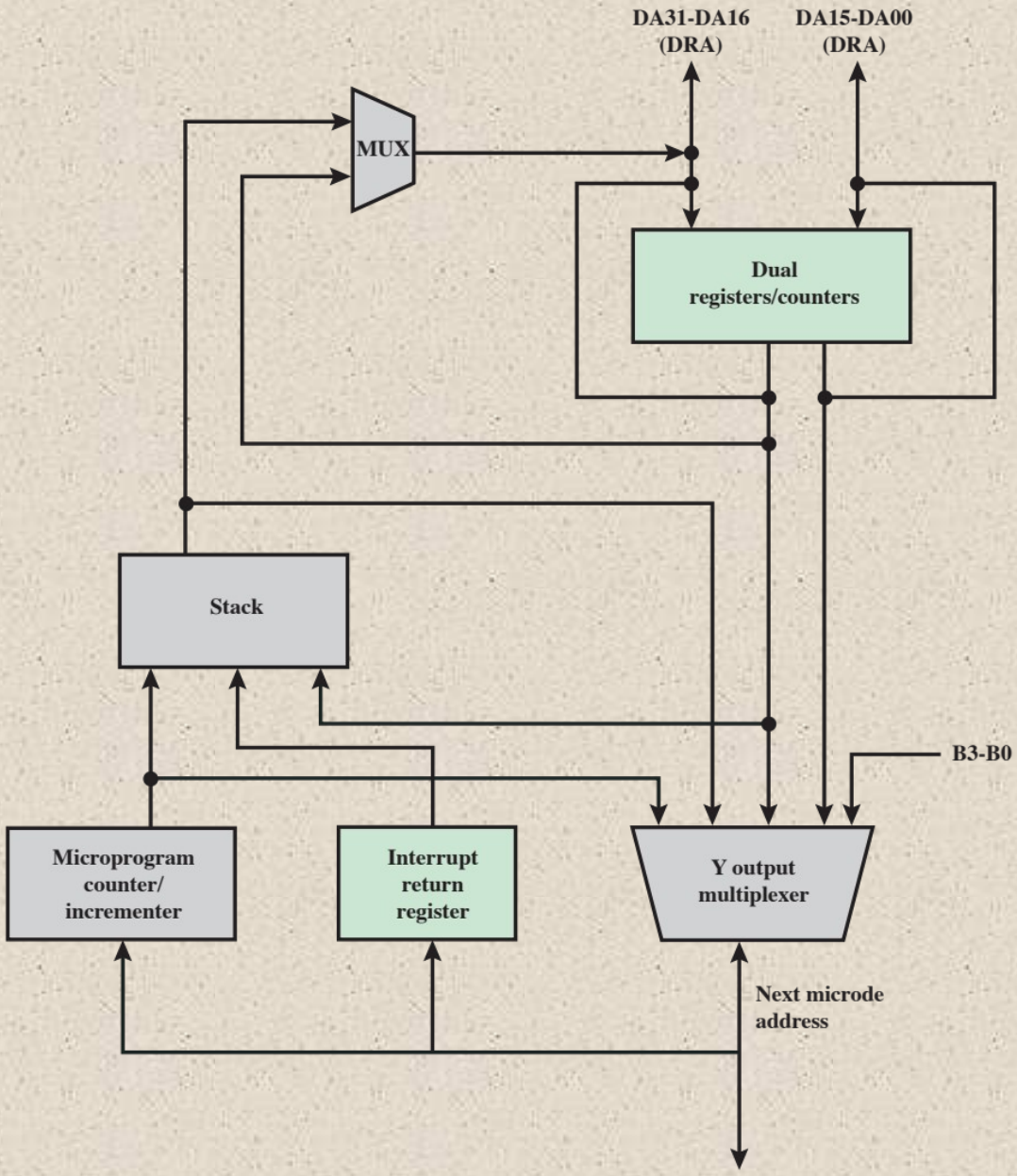

Figure 21.18 TI 8818 Microsequencer

© 2016 Pearson Education, Inc., Hoboken, NJ. All rights reserved.

Table 21.8 TI 8818 Microsequencer Microinstruction Bits (Field 28)

Mnemonic	Value	Description
RST8818	000000000110	Reset Instruction
BRA88181	011000111000	Branch to DRA Instruction
BRA88180	010000111110	Branch to DRA Instruction
INC88181	000000111110	Continue Instruction
INC88180	001000001000	Continue Instruction
CAL88181	010000110000	Jump to Subroutine at Address Specified by DRA
CAL88180	010000101110	Jump to Subroutine at Address Specified by DRA
RET8818	000000011010	Return from Subroutine
PUSH8818	000000110111	Push Interrupt Return Address onto Stack
POP8818	100000010000	Return from Interrupt
LOADDRA	000010111110	Load DRA Counter from DA Bus
LOADDRB	000110111110	Load DRB Counter from DA Bus
LOADDRAB	000110111100	Load DRA/DRB
DECRDRA	010001111100	Decrement DRA Counter and Branch If Not Zero
DECRDRB	010101111100	Decrement DRB Counter and Branch If Not Zero

© 2016 Pearson Education, Inc., Hoboken, NJ. All rights reserved.

(Table can be found on page 761 in the textbook.)

Table 21.9 TI 8832 Registered ALU Instruction Field (Field 27) (page 1 of 2)

Group 1		Function
ADD	H#01	R + S + Cn
SUBR	H#02	(NOT R) + S + Cn
SUBS	H#03	R = (NOT S) + Cn
INSC	H#04	S + Cn
INCNS	H#05	(NOT S) + Cn
INCR	H#06	R + Cn
INCNR	H#07	(NOT R) + Cn
XOR	H#09	R XOR S
AND	H#0A	R AND S
OR	H#0B	R OR S
NAND	H#0C	R NAND S
NOR	H#0D	R NOR S
ANDNR	H#0E	(NOT R) AND S
Group 2		**Function**
SRA	H#00	Arithmetic right single precision shift
SRAD	H#10	Arithmetic right double precision shift
SRL	H#20	Logical right single precision shift
SRLD	H#30	Logical right double precision shift
SLA	H#40	Arithmetic left single precision shift
SLAD	H#50	Arithmetic left double precision shift
SLC	H#60	Circular left single precision shift
SLCD	H#70	Circular left double precision shift
SRC	H#80	Circular right single precision shift
SRCD	H#90	Circular right double precision shift
MQSRA	H#A0	Arithmetic right shift MQ register
MQSRL	H#B0	Logical right shift MQ register
MQSLL	H#C0	Logical left shift MQ register
MQSLC	H#D0	Circular left shift MQ register
LOADMQ	H#E0	Load MQ register
PASS	H#F0	Pass ALU to Y (no shift operation)
Group 3		**Function**
SET1	H#08	Set bit 1
Set0	H#18	Set bit 0
TB1	H#28	Test bit 1
TB0	H#38	Test bit 0
ABS	H#48	Absolute value
SMTC	H#58	Sign magnitude/twos-complement
ADDI	H#68	Add immediate

© 2016 Pearson Education, Inc., Hoboken, NJ. All rights reserved.

(Table can be found on page 764 in the textbook.)

Table 21.9 TI 8832 Registered ALU Instruction Field (Field 27) (page 2 of 2)

SUBI	H#78	Subtract immediate
BADD	H#88	Byte add R to S
BSUBS	H#98	Byte subtract S from R
BSUBR	H#A8	Byte subtract R from S
BINCS	H#B8	Byte increment S
BINCNS	H#C8	Byte increment negative S
BXOR	H#D8	Byte XOR R and S
BAND	H#E8	Byte AND R and S
BOR	H#F8	Byte OR R and S
Group 4		**Function**
CRC	H#00	Cyclic redundancy character accum.
SEL	H#10	Select S or R
SNORM	H#20	Single length normalize
DNORM	H#30	Double length normalize
DIVRF	H#40	Divide remainder fix
SDIVQF	H#50	Signed divide quotient fix
SMULI	H#60	Signed multiply iterate
SMULT	H#70	Signed multiply terminate
SDIVIN	H#80	Signed divide initialize
SDIVIS	H#90	Signed divide start
SDIVI	H#A0	Signed divide iterate
UDIVIS	H#B0	Unsigned divide start
UDIVI	H#C0	Unsigned divide iterate
UMULI	H#D0	Unsigned multiply iterate
SDIVIT	H#E0	Signed divide terminate
UDIVIT	H#F0	Unsigned divide terminate
Group 5		**Function**
LOADFF	H#0F	Load divide/BCD flip-flops
CLR	H#1F	Clear
DUMPFF	H#5F	Output divide/BCD flip-flops
BCDBIN	H#7F	BCD to binary
EX3BC	H#8F	Excess -3 byte correction
EX3C	H#9F	Excess -3 word correction
SDIVO	H#AF	Signed divide overflow test
BINEX3	H#DF	Binary to excess –3
NOP32	H#FF	No operation

© 2016 Pearson Education, Inc., Hoboken, NJ. All rights reserved.

(Table can be found on page 765 in the textbook.)

Summary

Chapter 21

Microprogrammed Control

- Basic concepts
  - Microinstructions
  - Microprogrammed control unit
  - Wilkes control
  - Advantages and disadvantages
- TI 8800
  - Microinstruction format
  - Microsequencer
  - Registered ALU
- Microinstruction sequencing
  - Design considerations
  - Sequencing techniques
  - Address generation
  - LSI-11 microinstruction sequencing
- Microinstruction execution
  - Taxonomy of microinstructions
  - Microinstruction encoding
  - LSI-11 Microinstruction execution
  - IBM 3033 Microinstruction execution

© 2016 Pearson Education, Inc., Hoboken, NJ. All rights reserved.